ZX CR123A

COAST®
ZITHION-X

USB-C Built in



Features

Coast's CR123A rechargeable battery incorporates COAST ZX Optimized Voltage® technology, featuring proprietary voltage step-down circuitry to dynamically adjust the power supply, mimicking the discharge characteristics of single use batteries. Integrated safety circuitry ensures protection against overcharging and over-discharging. The leak-resistant battery casing reduces the risk of corrosion during extended usage while preserving device integrity. The battery includes a USB-C charge port for efficient recharging, and features LED status indicators for real-time feedback on the charging process.

General Battery Specifications

Classification:	Rechargeable Cylindrical Lithium-Ion
Designation:	3V Lithium R17345, 3V Lithium CR123A
Nominal Voltage:	3.0 volts
Nominal Capacity:	1100 mAh
Nominal Energy:	2700 mWh
Typical Weight:	19.8 gram (0.70 oz.)
Typical Volume:	7.6 cubic cm (0.46 cubic inch)
Operating Temp:	-18°C~55°C (0°F~130°F)
Jacket:	Plastic Label

Electrical Specifications

Charge-in Port:	USB-C
Charge Current:	Approx. 500mA
Charge Indicator:	Red: Charging; Green: Fully Charged
Charge Time:	Approx. 2.5 Hours
Overcharge Protection:	4.275±0.075V
Over-discharge Protection:	1.7±0.3V
Cycle Life:	1000 cycles

Approvals

CEC Compliant
CE (CE-EMC)
UN38.3

ANSI/IEC Standard Dimensions

mm (inches)

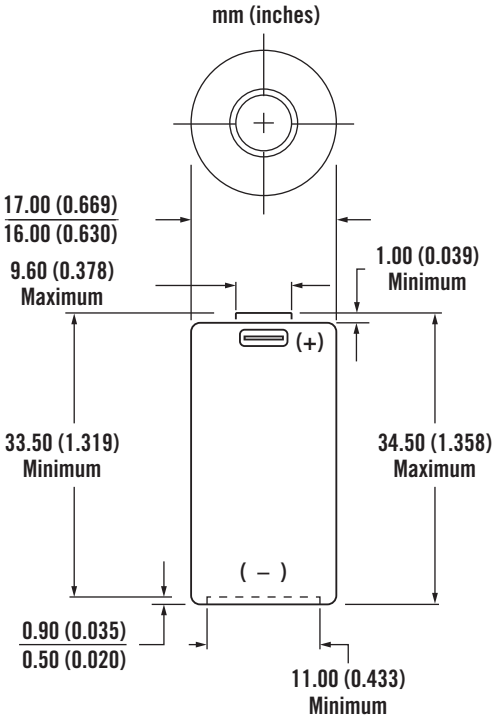

COAST®
8033 NE Holman | Portland, OR 97218 | 1.800.426.5858 | COASTportland.com

Contents are subject to change without notice and do not constitute a warranty. Performance may vary by device, for reference only.